Technical file BG210

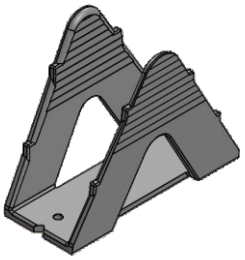

Material description

This patented system was designed to provide easy and faster alignment for a supporting structure for any type of facade cladding that is installed floating with or without insulation.

Product advantages

-No thermal bridges
-Made from 100 % recycled material
-Alignment can be done with screws as well as with gas / pressure air nailing machine
-Extra large margin for alignment
-Ideal for renovation applications

Application fields

Facade mounting system for facade cladding during renovation and new construction
Can be used up to a height of 12 m. (Other heights on demand)

Product storage

Storage of the products must be done in the original cardboard boxes separated from direct sunlight and rain.
Provide the necessary ventilation.

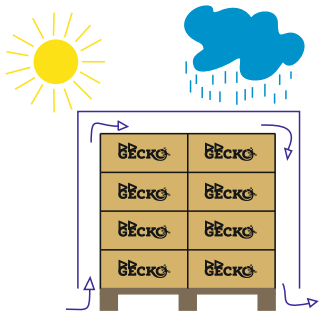

Packaging	Number	Weight	Dimensions (LxWxH)
Box	18 pcs	10.7kg	60 x 40 x 25cm
Pallet	360 pcs	229 kg	120 x 80 x 140cm

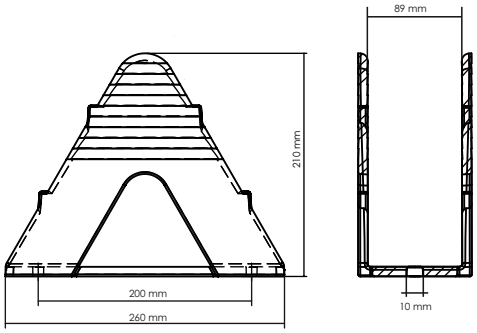

Product measurements

Length:	260mm
Width:	107mm
Height:	210mm
Drilling holes heart to heart:	200mm

Product properties

Tests in accordance with: ETAG034 (2012), 5.4.2 en 5.7.1

Average breaking load:	149.71 kg/pcs
Sliding resistance:	210.21 kg/pcs
Tensile resistance:	226.72 kg/pcs

Tests in accordance with: ETAG034 (2012), 5.4.4

Dynamic load	> 900N (soft impact)
	> 10N (steel ball 1kg)

Material properties

Resistant:	to moisture, corrosion, fungi, salts
Thermal resistance:	100% thermally disruptive
Ecological:	100% recycled material

www.gecko-fix.com

Gecko BV | Hollestraat 17, 3290 Deurne | info@gecko-fix.com

Technical file BG210

Assembly Gecko® BG210 properties

Drilling diameter:	Dia. 10mm
Plug length:	≥ 80mm
Min. drilling depth:	≥ 90mm
Tool:	T40/SW13
Drilling distances:	200mm heart to heart
Façade frame screws:	Dia 7.2mm (dia 19mm head)
Mounting resistance:	≥ 11 KN

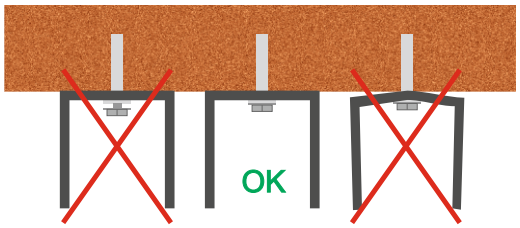

Please carefully follow the manufacturer's operating instructions and installation instructions for the selected fastening bolts and plugs.

The plugs must be adapted to the available surface and checked by the installer.

Mounting framework properties

Screws:	Flange head wood screw
Screw sizes:	5mm x 40mm (T25) stainless steel A2
Nails:	3.1mm x 50-65mm stainless steel A2
Wooden framework:	SLS 38/45 x 89mm planed

Please pay attention to the quality of the wooden batten to ensure good alignment EN 1611-1 / STS 04 / NBN EN 14081

preservation by process A3, moisture ≥ 16%

Assembly brackets

When mounting the brackets on the substrate, the brackets must be covered within 6 to 8 weeks by means of closed wall cladding or when you opt for open joint wall cladding, you must install a UV-facade cloth that guarantees a minimum of ten years of guarantee against UV radiation in open joints of more than 10 mm.

Closed facade cladding

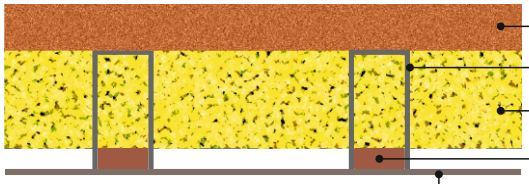

Open joint façade cladding

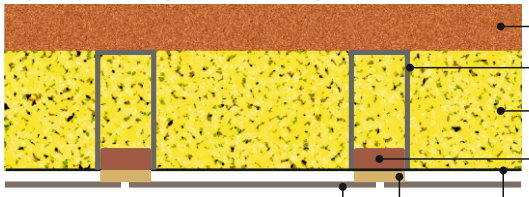

Mounting detail

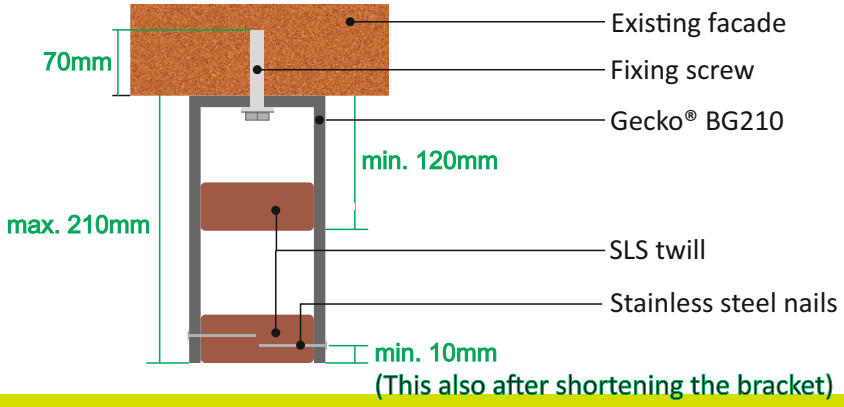

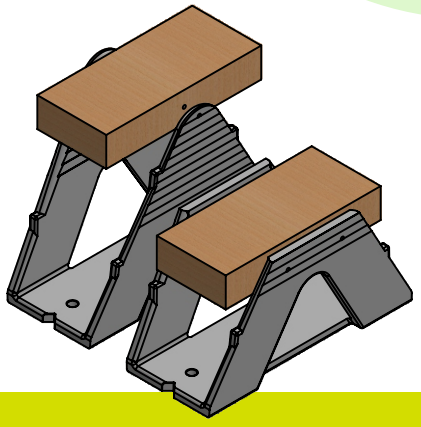

www.gecko-fix.com

Gecko BV | Hollestraat 17, 3290 Deurne | info@gecko-fix.com

Technical file BG210

Assembly guidelines

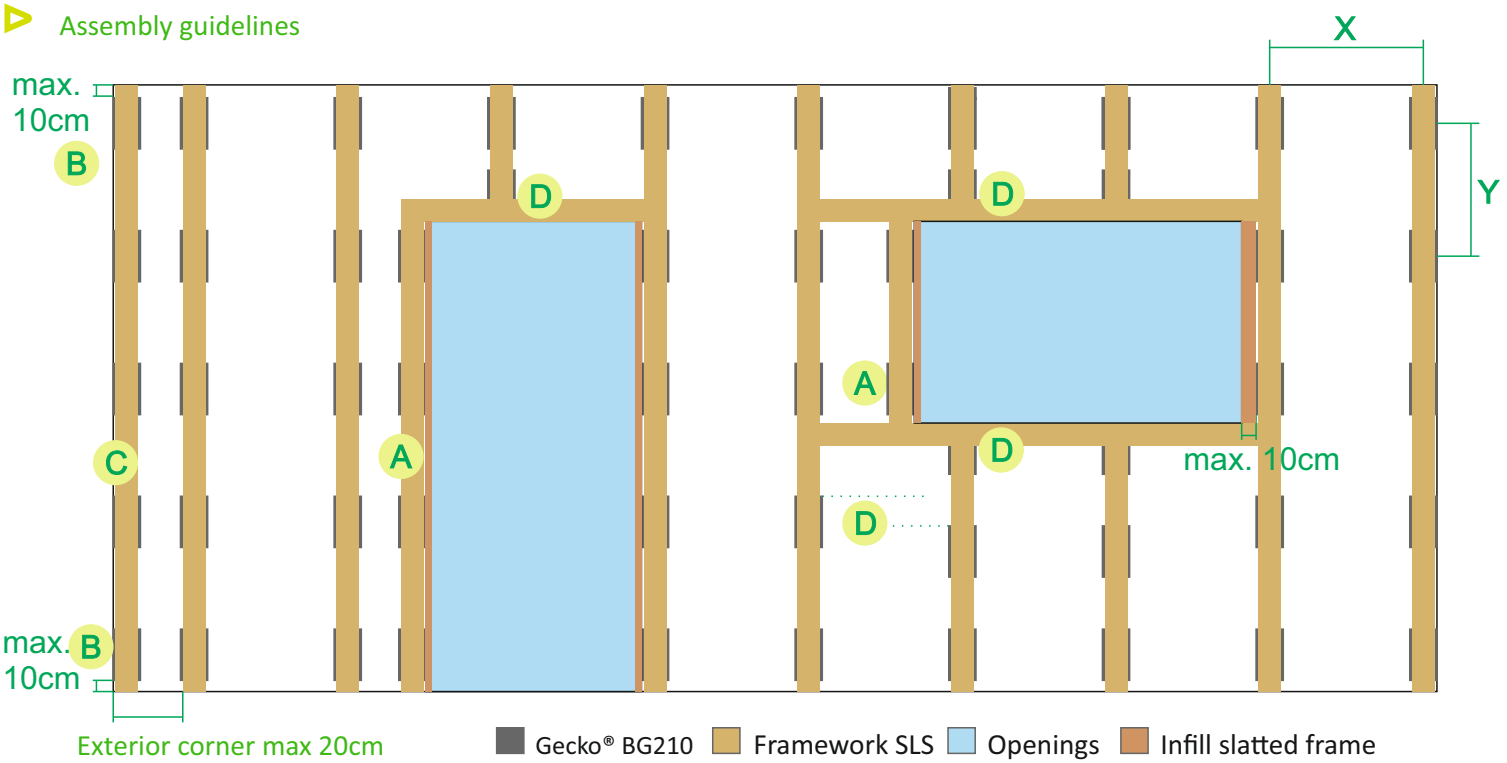

A: Always install extra brackets at the openings if they are more than 10 cm away from the opening and/or place extra brackets and carrier when the 'ravel' opening is higher than 80 cm.

B: Place the brackets at the bottom and top so that they are no more than 10 cm away from the beginning and the end of the facade cladding

C: Always place additional brackets on the outside corners if they are more than 20 cm away from the underlying structure

D: Position the brackets so that they are flush with the openings at the top and bottom. If necessary, the other brackets can be spaced further in such a way that the brackets can be placed nicely at the top and bottom.

The contractor / installer is responsible for checking that the placed wooden construction rafters (SLS) are in conformity with the desired facade cladding.

To determine the X & Y distances, please fill in a site request form via our website.

Please download the most recent technical data sheet online at all times.

www.gecko-fix.com

Gecko BV | Hollestraat 17, 3290 Deurne | info@gecko-fix.com